X-BEAM™

High Intensity LED Machine Vision Beam Lights

Developed from FSI Machine Vision's lab work with thousands of applications, these rugged, high intensity LED beam lights fill an important gap in the creation of optimized machine vision lighting solutions. This family has now been expanded to include architectural, general industrial and specialty versions.

The long life and rapid cycling capabilities inherent to LED lighting provide additional benefits and versatility. The single-LED design provides patterns that are much more consistent at variable distances.

The X-Beam series features a rugged solid aluminum housing. The mounting bolt pattern is either one ¼" 20 bolt or two 8-32 bolts on 1" centers.

X-Beams are available with nearly any combination of these selections of beam width, color/spectrum, and the output transformations:

Color/ Spectrum

- **Red/Orange -** Highest output and efficiency, the most common choice for monochromatic / gray-scale machine vision applications.
- **Warm-White -** The most common choice for color machine vision applications.
- **Daylight White** - Used for gray-scale / monochromatic machine vision application where orange/red is not suitable due to functional or aesthetic preferences. Higher and whiter light output than the Warm-White, but uneven spectral distribution makes this unsuitable for many color rendition applications.
- **Red** - Traditional machine vision red LED.
- **Cyan, Amber, Blue, Royal Blue, Green -** Used for certain specialty applications, as well as those where the appearance or novelty of special colors is preferred.

Beam Width Narrow, Wide

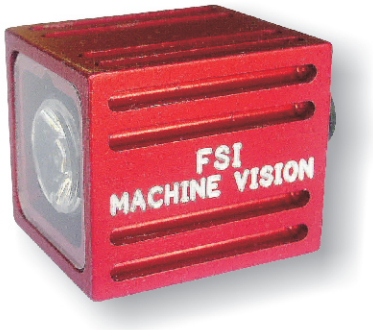

- **Narrow** - This provides a beam type output
- **Wide** - This provides a very wide illumination pattern

Output Transformation

- **None** - provides the highest light level output.
- **MV** - Transfer function engineered for most machine vision applications, to provide higher uniformity at smaller scales.
- **Planar** - For use with wide beam width selection to provide a high intensity (medium uniformity) planar and backlight source.

FSI Express
668 Western Ave. Lombard IL 60148-2097 USA
FSI Technologies Inc.
FAX 630-932-0016 www.fsiexpress.com
© 2006 FSI Technologies Inc.

Machine Vision Beam Style

Model Number	Color	Transform	Width	Price
XB-01-21	Red/Orange	MV	Narrow	$179
XB-02-21	Red	MV	Narrow	$179
XB-03-21	Warm White	MV	Narrow	$199
XB-04-21	Daylight White	MV	Narrow	$179

Industrial, General, Architectural and Specialty Lighting

Model Number	Color	Transform	Width	Price
XB-01-11	Red/Orange	None	Narrow	$139
XB-01-12	Red/Orange	None	Wide	$149
XB-02-11	Red	None	Narrow	$139
XB-02-12	Red	None	Wide	$149
XB-03-11	Warm White	None	Narrow	$159
XB-03-12	Warm White	None	Wide	$169
XB-04-11	Daylight White	None	Narrow	$139
XB-04-12	Daylight White	None	Wide	$149
XB-05-11	Cyan	None	Narrow	$144
XB-05-12	Cyan	None	Wide	$154
XB-06-11	Amber	None	Narrow	$144
XB-06-12	Amber	None	Wide	$154
XB-07-11	Blue	None	Narrow	$144
XB-07-12	Blue	None	Wide	$154
XB-08-11	Royal Blue	None	Narrow	$144
XB-08-12	Royal Blue	None	Wide	$154
XB-09-11	Green	None	Narrow	$144
XB-09-12	Green	None	Wide	$154

Machine Vision Backlight/Opaque Planar

Model Number	Color	Transform	Width	Price
XB-01-32	Red/Orange	Planar	Wide	$169
XB-02-32	Red	Planar	Wide	$169

FSI Express
668 Western Ave. Lombard IL 60148-2097 USA
FSI Technologies Inc.
FAX 630-932-0016 www.fsiexpress.com
© 2006 FSI Technologies Inc.

X-Beam Power Supplies & Cables

X-Beams are energized by use of an X-Beam power supply and appropriate interconnect cable. The adjustable supply is suitable for all X-Beam applications. The XBP family is a low cost series that is suitable for certain applications.

KFLP Series Dual Channel Adjustable Power Supply

This is our best and most versatile X-Beam power supply. It has 2 channels; each will power up to 3 X-Beams, for a total of 6. Each channel has it's own intensity-adjustment control knob. The output is regulated for zero or near-zero ripple under all design load conditions. The unit includes a 120 VAC power cord with plug. The KFLK family is also suitable for load side switching of the lights.

Model #	Description	Price
KFLP-224-350B	Dual Channel Adjustable X-Beam Power Supply	$198
XBC-1	Cable, connects 1 X-Beam to one channel of KFLP power supply*	$49
XBC-2	Cable, connects 2 X-Beams to one channel of KFLP power supply*	$91
XBC-3	Cable, connects 3 X-Beams to one channel of KFLP power supply*	$133

XBP Basic Style Power Supply Module

The XPB series is our most economical power supply series. Each will supply up to 3 X-Beam light sources. Requires an electrician for installation, including connecting power to the 120VAC supply input lugs. The enclosed version requires punching of the cable entry and exit holes in the desired locations, and supply of the desired type of cable entry and exit fittings.

Model #	Description	Price
XBP-001	Open Style Supply Module	$59
XBP-041	Power supply module in NEMA 4 water resistant enclosure	$189
XBC-1B	Cable, connects 1 X-Beam to one XBP series power supply*	$42
XBC-2B	Cable, connects 2 X-Beams to one XBP series power supply*	$82
XBC-3B	Cable, connects 3 X-Beams to one XBP series power supply*	$122

*Select the cable for the exact number of X-Beams to be powered. For example, a two X-Beam cable is not suitable for a single X-Beam. All cables are 15' long. Multi-X-Beam cables have a "tree" type configuration, and the length from the power supply to each X-Beam is 15'.

FSI Offers Lighting Products Through 2 Divisions:

FSI Express Division - Lighting components, on-line, for those not requiring application assistance

FSI Machine Vision - Engineered lighting solutions for all other requirements

FSI Express
668 Western Ave. Lombard IL 60148-2097 USA
FSI Technologies Inc.
FAX 630-932-0016 www.fsiexpress.com
© 2006 FSI Technologies Inc.

Spectrum for color sources

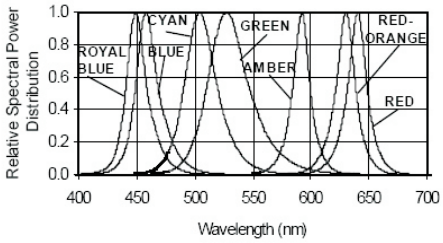

Spectrum for warm white sources

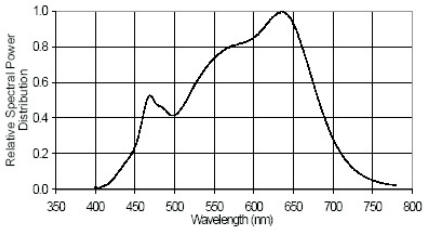

Spectrum for daylight white sources

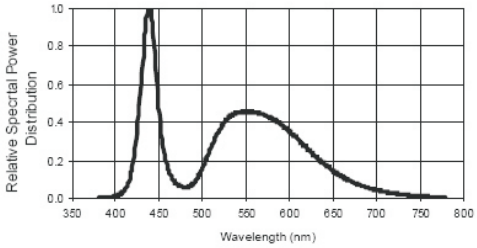

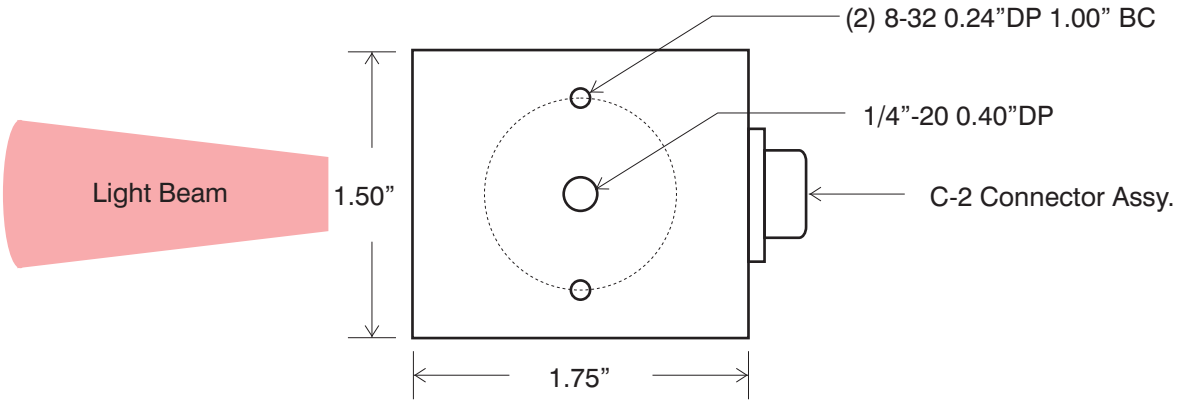

Bottom View

668 Western Ave. Lombard IL 60148-2097 USA

FSI Technologies Inc.

FAX 630-932-0016 www.fsiexpress.com

© 2006 FSI Technologies Inc.